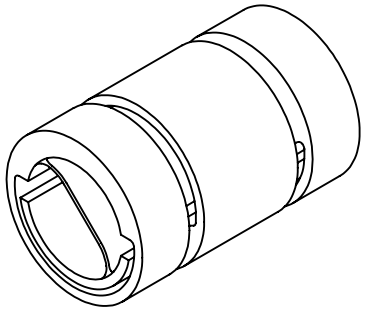

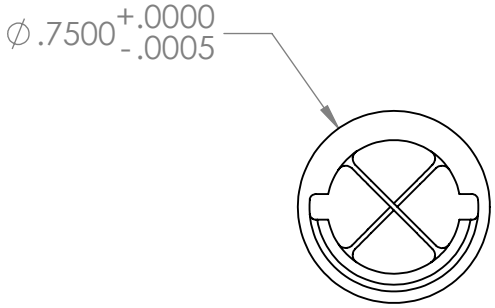

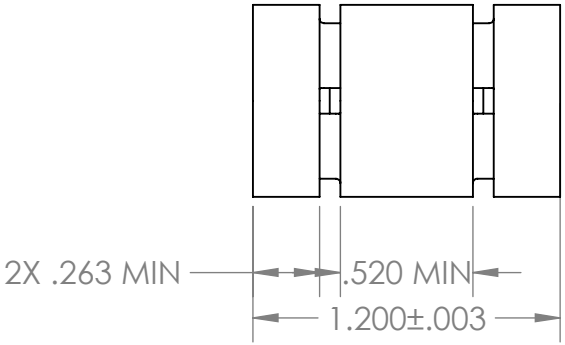

PROPRIETARY AND CONFIDENTIAL

THE INFORMATION CONTAINED IN THIS DRAWING IS THE SOLE PROPERTY OF C-FLEX BEARING COMPANY INC. ANY REPRODUCTION IN PART OR AS A WHOLE WITHOUT THE WRITTEN PERMISSION OF C-FLEX BEARING COMPANY INC. IS PROHIBITED.

REV.	CHANGE	DATE

REVISIONS

UNLESS OTHERWISE SPECIFIED:

DIMENSIONS ARE IN INCHES
TOLERANCES:
FRACTIONAL ±
ANGULAR: MACH ± BEND ±
TWO PLACE DECIMAL ±
THREE PLACE DECIMAL ±

INTERPRET GEOMETRIC TOLERANCING PER:

MATERIAL 400 SS

FINISH

DO NOT SCALE DRAWING

	NAME	DATE
DRAWN	VC	3/25
CHECKED		
ENG APPR.		
MFG APPR.		
Q.A.		

COMMENTS:

C-FLEX BEARING COMPANY

TITLE:

ID-30

SIZE	DWG. NO.	REV
A	4030-ID-30	-

SCALE: N/A WEIGHT: SHEET 1 OF 1